SECTION 11

DIVIDER UNIT CO2/507

The CO2/507 produces outputs at three different frequencies from an input signal with a frequency 4·4296875 MHz (f_o). The output frequencies are:

f_o
$f_o/2$
and $f_o/77$

The CO2/507, whose circuit is given in Fig. 11.1, is similar to part of the Divider Unit UN17/502 (see Instruction V.14). It is used in a Drive Unit GE1/517 (Instruction V.10).

The CO2/507 is constructed on a CH1/12A chassis with index peg positions 6 and 25.

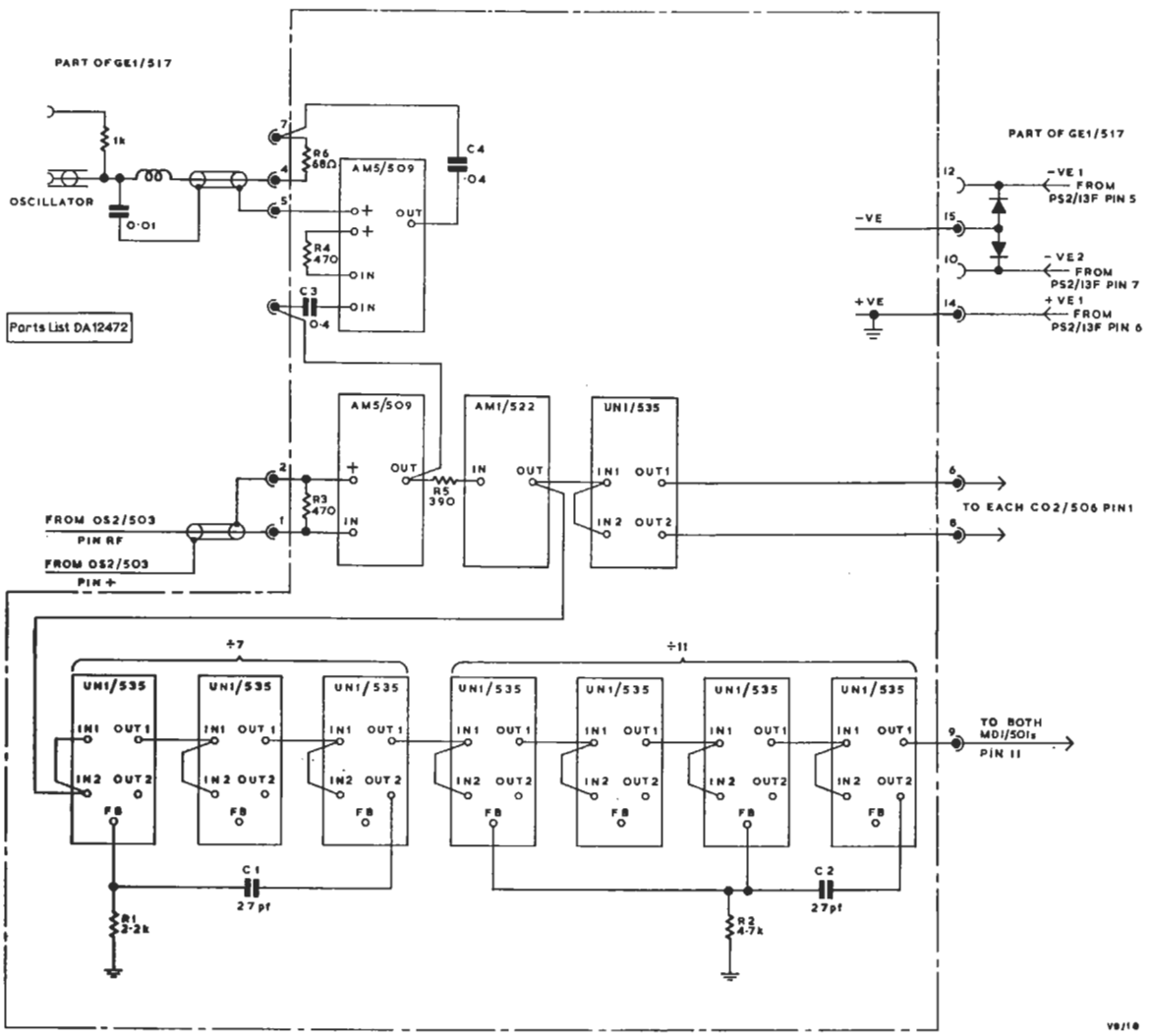

Fig. 11.1 Circuit of the CO2/507