TELEPHONE THROWBACK DELAY UNIT UN14/8

See also PA8/308, UN20/18

General

The UN14/8 is a subunit fitted in telephone panels in the Type-D range, for example in the panel PA8/308. It provides control of the sending of cue programme, and the throwback of calling to the Engineering Manual Exchange (EMX) on unanswered calls, for one outside source telephone line. For its operation it requires connections from the EMX cut-off wire, the ring detector unit UN20/18, the answer and cue programme keys, and the cue programme amplifier AM4/8, as shown on the circuit diagram for the telephone panel PA8/308.

The unit is constructed on a printed circuit card with dimensions of 5¾ by 3 inches.

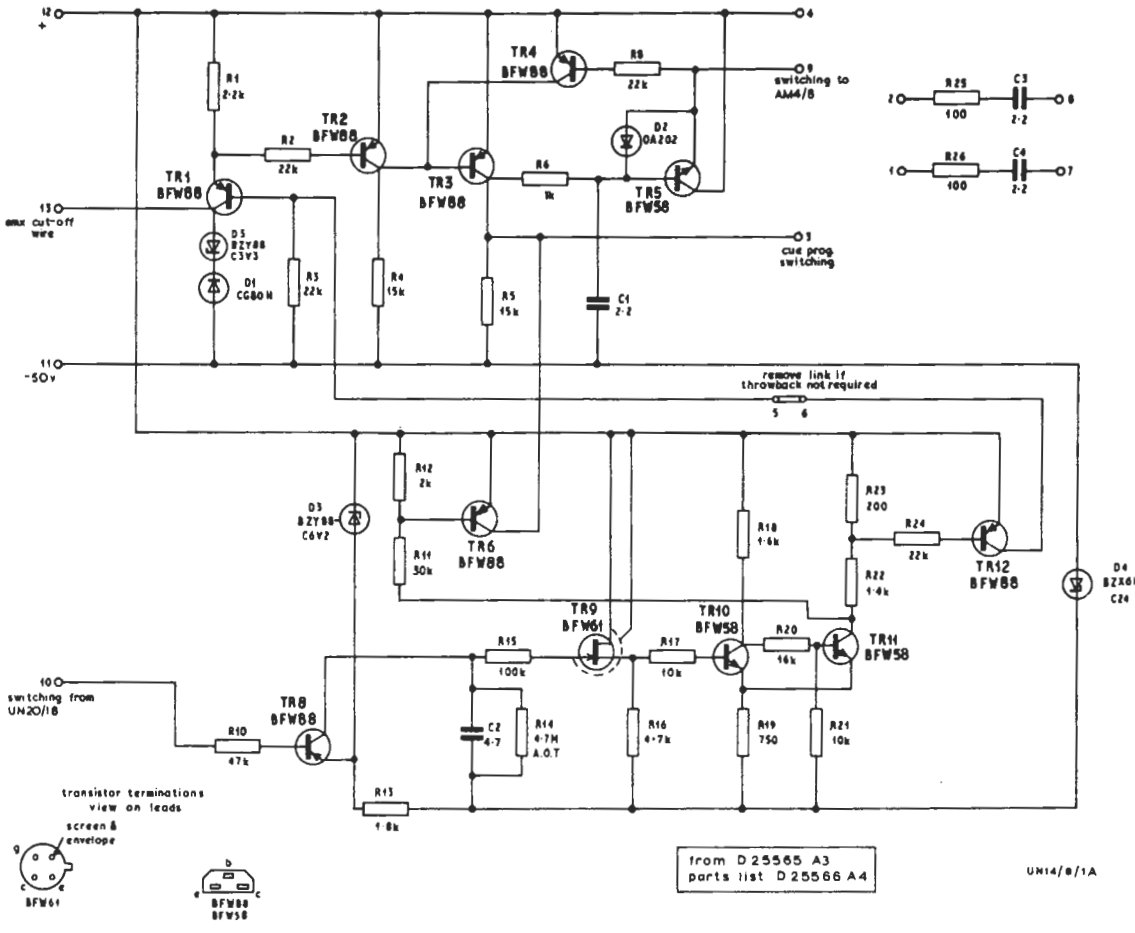

Fig. 1. Circuit of the UN14/8

Circuit Description (Fig. 1)

General

The unit operates from the 50-volt supply and has a maximum consumption of 40 mA.

For a complete description of the operation of the unit it is necessary to refer to the circuit diagrams of the associated units mentioned above.

The operation requires that the EMX cut-off wire voltage is applied to terminal 13, and this may be simulated by a 500-ohm resistor (representing the coil resistance of the EMX relay) between −50 volts and terminal 13.

Normal Condition

TR1 is turned on by base current supplied through R3. The EMX cut-off wire voltage thus appears across R1 and is applied to TR2 base, turning TR2 on. TR3 base is at 0 volts, so TR3 is off.

The −50 volt supply from the UN20/18 through the call lamp and R10 turns TR8 on, and C2 is charged to about 18 volts, this being the 50-volt supply voltage less the voltages across the zener diodes D3 and D4. TR9 gate is thus at about −6 volts, as is TR9 source. The Schmitt trigger TR10, TR11 is therefore held with TR10 on and TR11 off; TR11 collector and hence TR12 base are at 0 volts, and TR12 is off. TR6 base is also at 0 volts, and TR6 is therefore off. The control line QP/CF key (on the PA8/308) holds the junction of R5, R6 at 0 volts, and this causes TR5 to be turned on, thus reducing the d.c. supply to the cue amplifier AM4/8 to zero, and in this way suppressing any cue programme. The transistors are now in the following condition:

TR1 on, TR2 on, TR3 off, TR4 off, TR5 on,
TR6 off, TR8 on, TR9 conducting, TR10 on,
TR11 off, TR12 off.

Sending Cue Programme

If the control line CP/CF key is operated, either cue programme from the selector switch, or clean feed, is fed to the AM4/8; the junction of R5, R6 is no longer at 0 volts, and goes negative. TR5 base is negative with respect to its emitter; TR5 is turned off; the AM4/8 d.c. supply is restored and the input programme is passed to the control line through the answer key and ring key.

Incoming Ring

If a ring is received the output of the 17-Hz detector UN20/18 changes to about −3 volts. Because of the biasing derived from D3, this potential fed through R10 is sufficient to turn TR8 off. With TR8 off, C4 gradually discharges through R14, and with TR9 acting as a source-follower, when its source voltage reaches the trigger point of the Schmitt trigger TR10, TR11, after about 30 seconds, TR11 conducts, turning TR12 on.

This applies 0 volts to TR1 base, turning TR1 off and releasing the EMX cut-off so that a succeeding ring will call the EMX.

At this point, when TR11 conducts, TR6 is also turned on, applying 0 volts to the junction of R5, R6, thereby turning cue programme off as described for the normal condition.

If, however, the call is answered before TR10 and TR11 are triggered, TR8 is turned on, recharging C4 and resetting the delay circuit; cue programme is disconnected by the answer key contacts 1 and 2, and turned off by contact 4. On restoration of the answer key cue programme is restored.

If the EMX comes across the control line, the voltage across R1 disappears. Should cue programme be connected, TR5 will be off, TR5 emitter will be at −24 volts, TR4 will be on, and will apply 0 volts to TR3 base. The disappearance of the 0 volts via TR2 will not therefore affect the cue programme feed.

If however the EMX is called across the line to converse with the outside source and the continuity answer key is then restored, TR4 will be off and cue programme will be restored when the EMX disconnects and the negative voltage reappears on the cut-off wire.

The throwback circuit may be disabled by opening the link between TR12 collector and TR1 base. An earth applied at this point (e.g. by a key) will transfer the calling to the EMX. This feature may be used in mixer studios during the temporary absence of staff, to obviate the necessity to release all source selections.

Test Procedure

Apparatus Required

50-volt d.c. supply
500-ohm P.O. relay
1200-ohm 2·5-watt resistor
75-ohm resistor
P.O. No.-2 6-volt lamp
Avometer Model 8

Connections

(a) Connect the 50-volt supply to terminals 11 and 12 (positive).
(b) Connect the relay between terminals 11 and 13.
(c) Connect the lamp in series with the 1200-ohm resistor to terminals 11 and 10.
(d) Connect the Avometer (on 100-volt range) between terminals 9 and 11.
(e) Link terminals 3 and 4 with a key or strap.

Tests

1. Switch on the 50-volt supply. The relay should operate and the Avometer should register 50 volts. The lamp should not light.
2. Remove the link between terminals 3 and 4. The Avometer should register less than 24 volts. (With an AM4/8 connected this voltage will be 26 volts.)
3. With terminals 3 and 4 still open-circuited, connect the 75-ohm resistor to terminals 10 and 12; after 30 ±5 seconds, the Avometer should register 50 volts, and the relay should release. Disconnect the 75-ohm resistor; the relay should operate.

WWM(X) 7/71